ZUSATZPROFILE

aluplast® Kunststoff-Fenstersysteme

intertec®

IDEAL 1000 - 6000

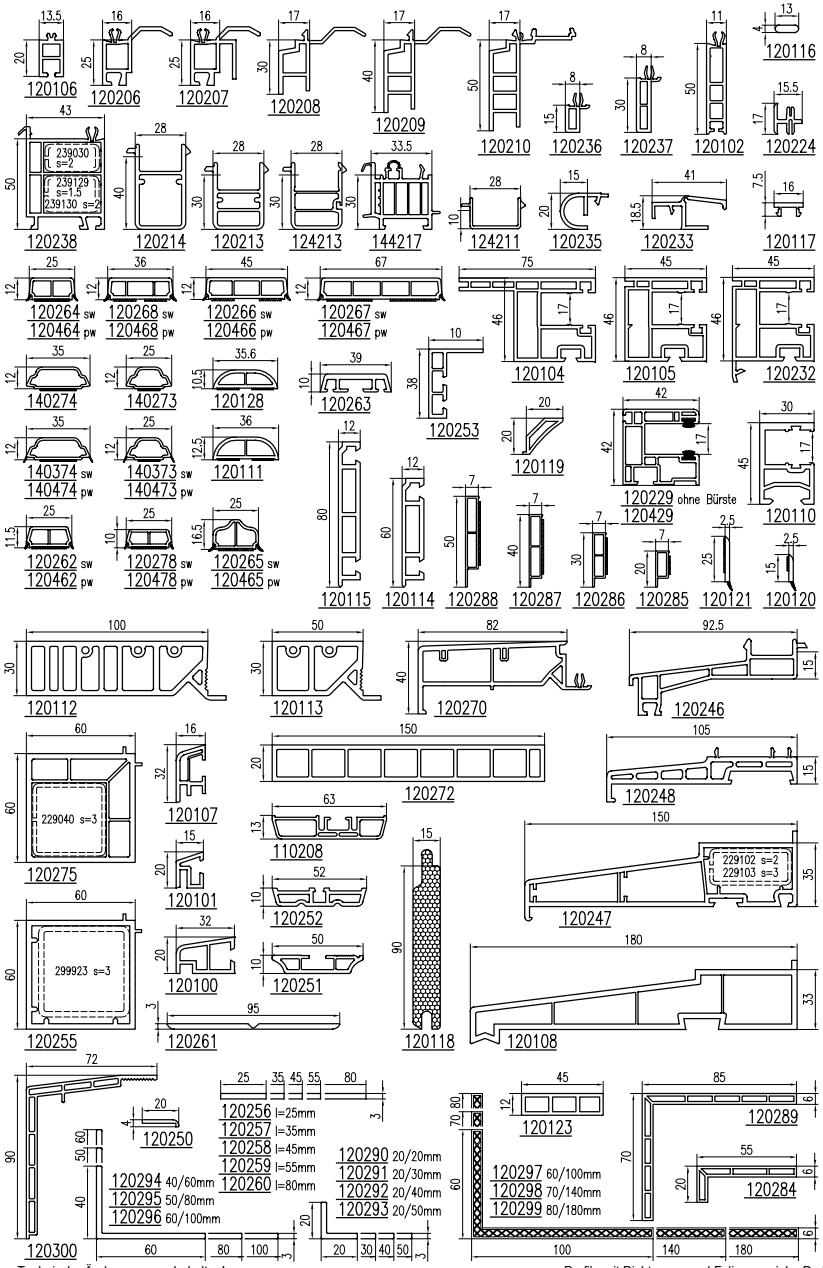

IDEAL 2000 - 6000

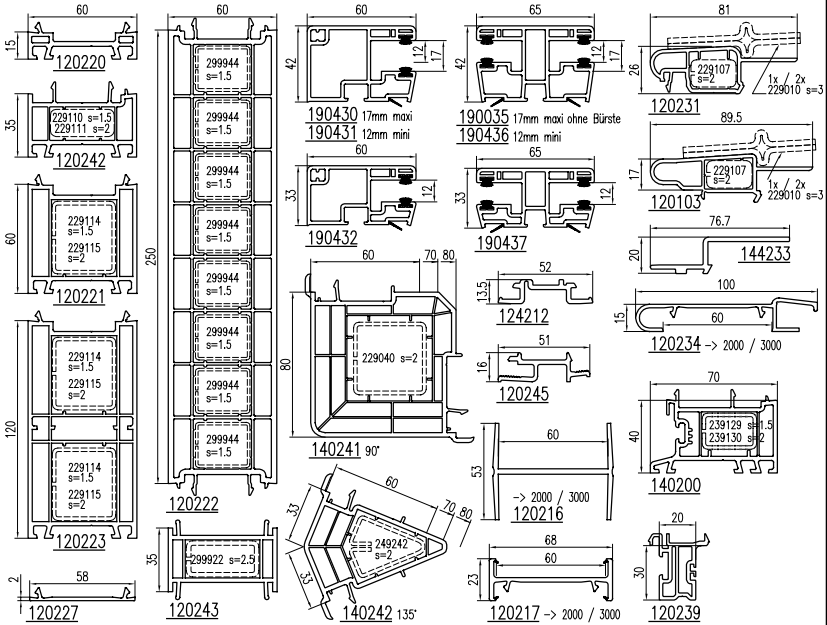

IDEAL 2000 - 5000

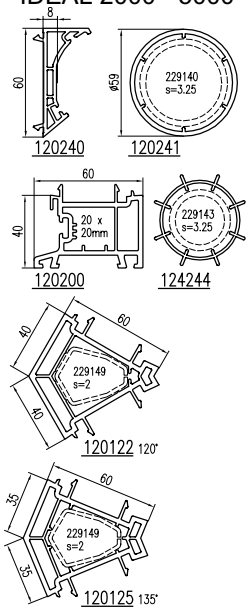

IDEAL 4000 - 6000

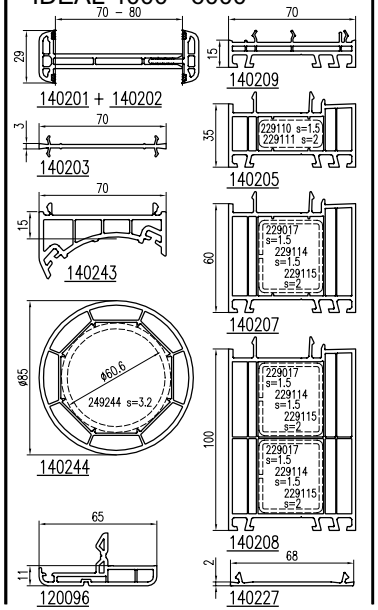

IDEAL 6000

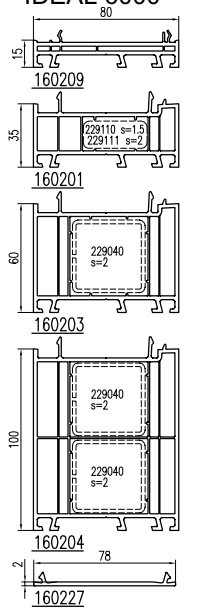

Zubehör

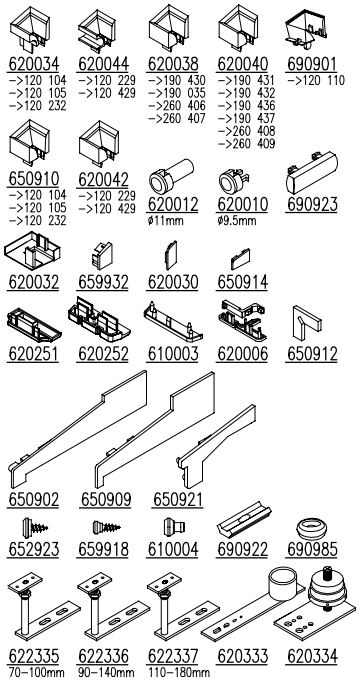

Verklotzungsbrücken	
660 911	2x12x100mm
669 922	3x12x100mm
660 916	2x20x100mm
669 919	3x20x100mm
669 920	4x20x100mm
669 921	2x22x100mm
669 899	3x22x100mm
660 900	4x22x100mm
659 905	1x25x 90mm
659 906	2x25x 90mm
659 907	5x25x 90mm
669 912	2x28x100mm
669 911	3x28x100mm
669 910	4x28x100mm
659 908	5x28x100mm
660 901	2x30x100mm
660 902	3x30x100mm
660 903	4x30x100mm
659 935	2x34x100mm
659 936	3x34x100mm
659 937	4x34x100mm
659 938	5x34x100mm
659 942	2x46x100mm
659 943	3x46x100mm
659 944	5x46x100mm

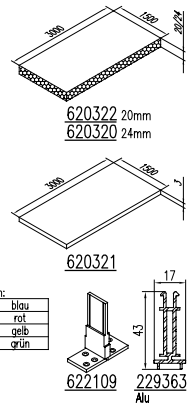

mm:	
2	blau
3	rot
4	gelb
5	grün
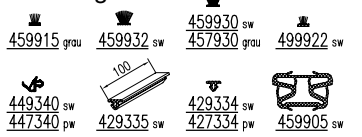
Dichtungen